GATE VALVE

DUCTILE IRON | PN-16 (Non Rising Stem)

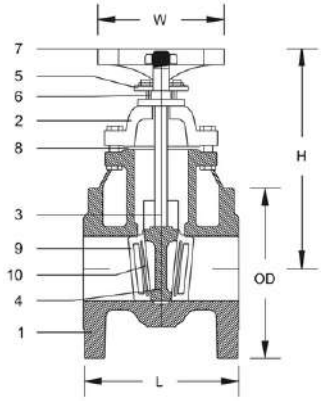

DESIGN & COMPLIANCES
EN 1171, EN 558-1 (3), BS 5150, BS 5163, AWWA C500-09

END CONNECTION
EN 1092-2, DIN 2501, BS 4504

TESTING STANDARD
API 598, BS 6755, EN 12266-1

APPLICATIONS
Hot & Cold Water, Oil, Gas, Raw Water, Waste Water

Sr. No	COMPONENTS	SPECIFICATIONS
1	Body	Ductile Iron EN-GJS-500
2	Bonnet	Ductile Iron EN-GJS-500
3	Stem	SS 304 | SS 316 | SS Cr13 | Brass CW614N | Bronze CC491K
4	Disc (Optional)	Ductile Iron EN-GJS-500
5	Gland	Ductile Iron EN-GJS-500
6	Gland Packing	Flexible Graphite | Non-Asbestos
7	Handwheel	Ductile Iron EN-GJS-500
8	Gasket	Flexible Graphite | Non-Asbestos
9	Body Seat Ring	SS 304 | SS 316 | SS Cr13 | Brass CW614N | Bronze CC491K
10	Disc Seat Ring (Optional)	SS 304 | SS 316 | SS Cr13 | Brass CW614N | Bronze CC491K
	Paint (Optional)	Epoxy | Corrosion Resistant | Polyurethane

Special Configurations (Subject to manufacturer's approval)

- Gear Operated
- Brass, Bronze Seat Rings
- Chain Wheel with Locking Arrangement

DIMENSIONS (MM)															
Sizes	**50**	**65**	**80**	**100**	**125**	**150**	**200**	**250**	**300**	**350**	**400**	**450**	**500**	**600**	**700**
Face to Face (L)	178	190	203	229	254	267	292	330	356	381	406	432	457	508	610
OD (D)	165	185	200	220	250	285	340	405	460	520	580	640	715	840	910
Height (H)	290	325	360	400	480	530	575	700	765	950	1080	1165	1280	1495	1650
Wheel (W)	150	175	175	200	200	225	225	250	300	600	600	800	800	800	1000

Tel: +92-323-4903393, 303-4457985, 333-5723120
Email: info@gmcvalves.com, sales@gmcvalves.com
Website: www.gmcvalves.com